Amstrad

PC7386SX

PERSONAL COLOUR COMPUTER

SERVICE MANUAL

CONTENTS

	Page
Technical Specification	2
Safety Tests	2
Main P.C.B. Top View	3
Main P.C.B. Bottom View	4
Schematic Diagrams	5 - 17
Cabinet Exploded View	18
Cabinet Parts List	19
Electrical Parts List	19

Date of First Publication October 1992.
Information published latest available at time of print.
Amstrad reserves the right to supply selective components.

TECHNICAL SPECIFICATION

Processor	:	80386SX
Clock Speed	:	25MHz
Main on-board Memory		
40Mb Unit	:	1Mb RAM (user expandable up to 16Mb)
80Mb Unit	:	2Mb RAM (user expandable up to 16Mb)
Memory Expansion	:	Via 4 SIMM sockets (up to 16Mb)
Hard Drive - standard	:	40Mb Fast Access (28ms) OR 80Mb Fast Access (19ms)
Floppy Disk Drive - standard	:	3.5" 1.44Mb
Disk Drive Bays	:	1 x 3.5" third height FDD bay 1 x 3.5" half height HDD bay
Expansion Slots	:	2 x 16 bit, 2/3 length ISA slots
Graphics	:	VGA (VGA, EGA, CGA, MDA and Hercules Compatible)
Video Memory	:	256Kb (expandable up to 512Kb)
Maximum resolution	:	1024 x 768 pixels
On-screen colours	:	Up to 256 (max) out of a total palette of over 250,000
External Interfaces	:	Bi-directional Parallel Port, Twin RS232C Serial Ports, PS/2 type Keyboard Socket, PS/2 type Mouse Socket, External VGA Monitor Port, External VGA Monitor Power Socket
Power Supply	:	50W 110/220-240V Auto-Switching
System Unit Dimensions	:	325mm (W) x 78mm (H) x 281mm (D)
Keyboard	:	102 key high quality PS/2 type
Mouse - standard	:	Two button PS/2 type
Supplied Software	:	MS-DOS 5.0, Amstrad Desktop (including user-friendly graphical interface and on-screen tutorial) Lotus Works 3.0 (including word processing, spreadsheet with graphics, database and communications)
Monitors	:	
VGA PC14FMD	:	14" Flat screen paper white mono
Super VGA PC14M39	:	14" Hi-Res Colour (0.39 Dot Pitch)
PC14M28	:	14" Ultra Hi-Res Colour (0.28 Dot Pitch)

SAFETY TEST

All monitors are tested to the following specifications.

1. **Flash Test:** Test at 1.5kV RMS / 3 sec between the live and neutral poles of the mains lead and all accessible metal points on the exterior of the set.
2. **Insulation Resistance Test:** Test at 1.5kV RMS / 3 sec between the live and neutral poles of the mains lead and all accessible metal points on the exterior of the set to show a resistance greater than 4Mohms.
3. **Earth Continuity Test:** The resistance of the mains lead shall not exceed 0.5ohms.

PLEASE NOTE: When any work is completed on this unit, correct safety tests must be carried out to ensure continued electrical safety.

PLEASE NOTE: All parts shown with the part number prefix ⚠ are Safety Items and must be replaced with similar items having an identical safety specification.

All those items may be purchased direct from AMSTRAD plc.

In keeping with our policy of continually improving our service, and the technical quality of our products, we reserve the right to change component types, manufacturers, sources of supply or technical specification at any time.

AMSTRAD PLC
BRENTWOOD HOUSE, 169 KINGS ROAD, BRENTWOOD, ESSEX CM14 4EF.

MAIN P.C.B. Top View

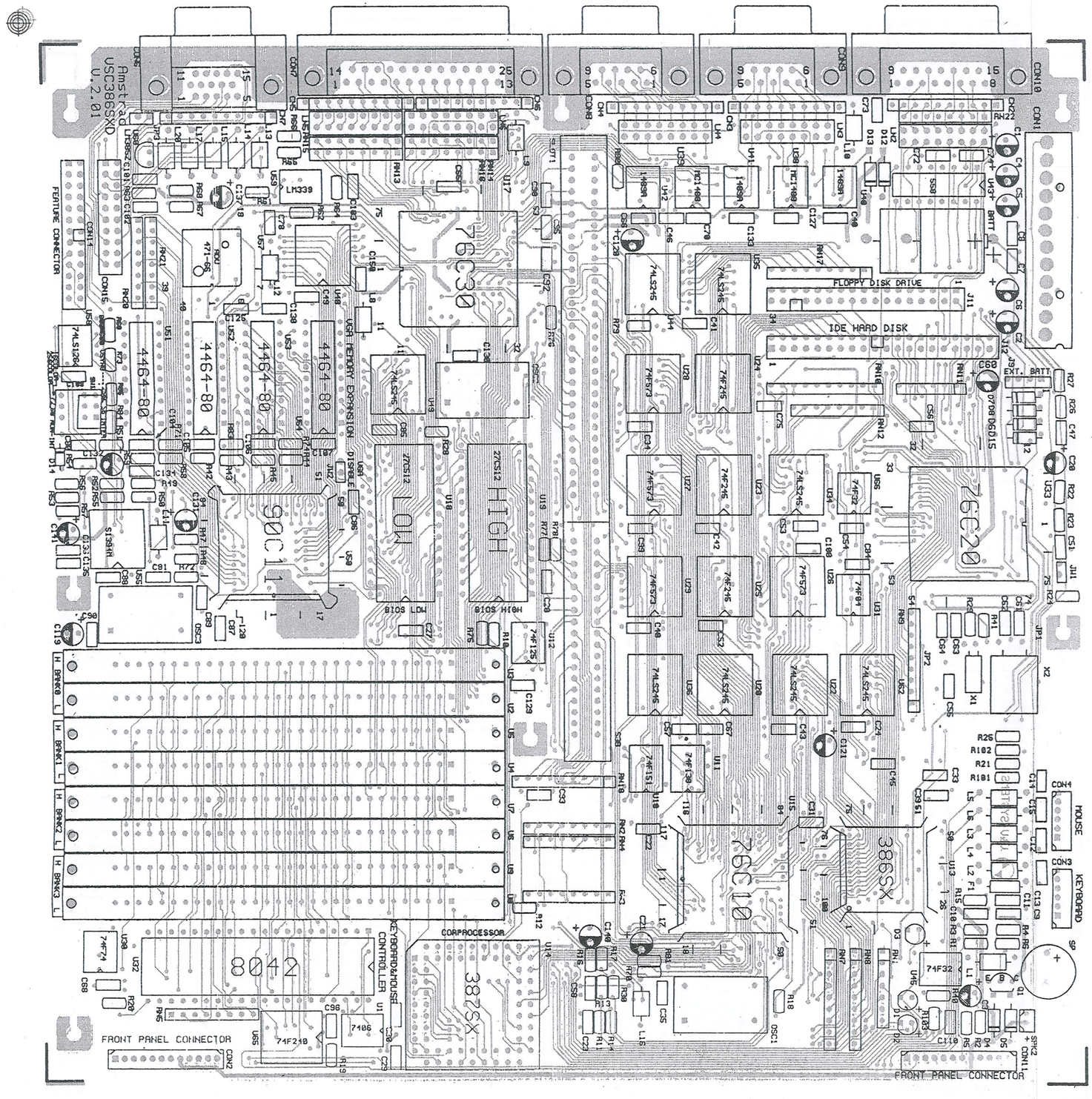
Amstrad
VSC386SXD
v.2.01
FEATURE CONNECTOR
FLOPPY DISK DRIVE
IDE HARD DISK
EXT. BATT
MOUSE
KEYBOARD
SP
SPK2
FRONT PANEL CONNECTOR
FRONT PANEL CONNECTOR
VGA MEMORY EXPANSION DISABLE
BIOS LOW
BIOS HIGH
CORPROCESSOR
KEYBOARD&MOUSE CONTROLLER
LM339
74LS245
74F573
74F245
74LS273
74F04
74F32
74F138
74F151
74F125
74F240
74F74
74LS125
74LS04
74LS32
74LS08
74LS1284
74LS373
74LS374
74LS244
74LS273
74LS245
74LS373
74LS245
74F573
74F245
74F573
74F245
74LS245
74LS245
74LS245
74F573
74F04
74F32
74F138
74F151
74F125
74F240
74F74
74LS125
74LS04
74LS32
74LS08
74LS1284
74LS373
74LS374
74LS244
74LS273
74LS245
74LS373
27C512 HIGH
27C512 LOW
4464-80
4464-80
4464-80
4464-80
76C30
76C20
76C10
386SX
386SX
80C11
80C11
80C11

MAIN P.C.B. Bottom View

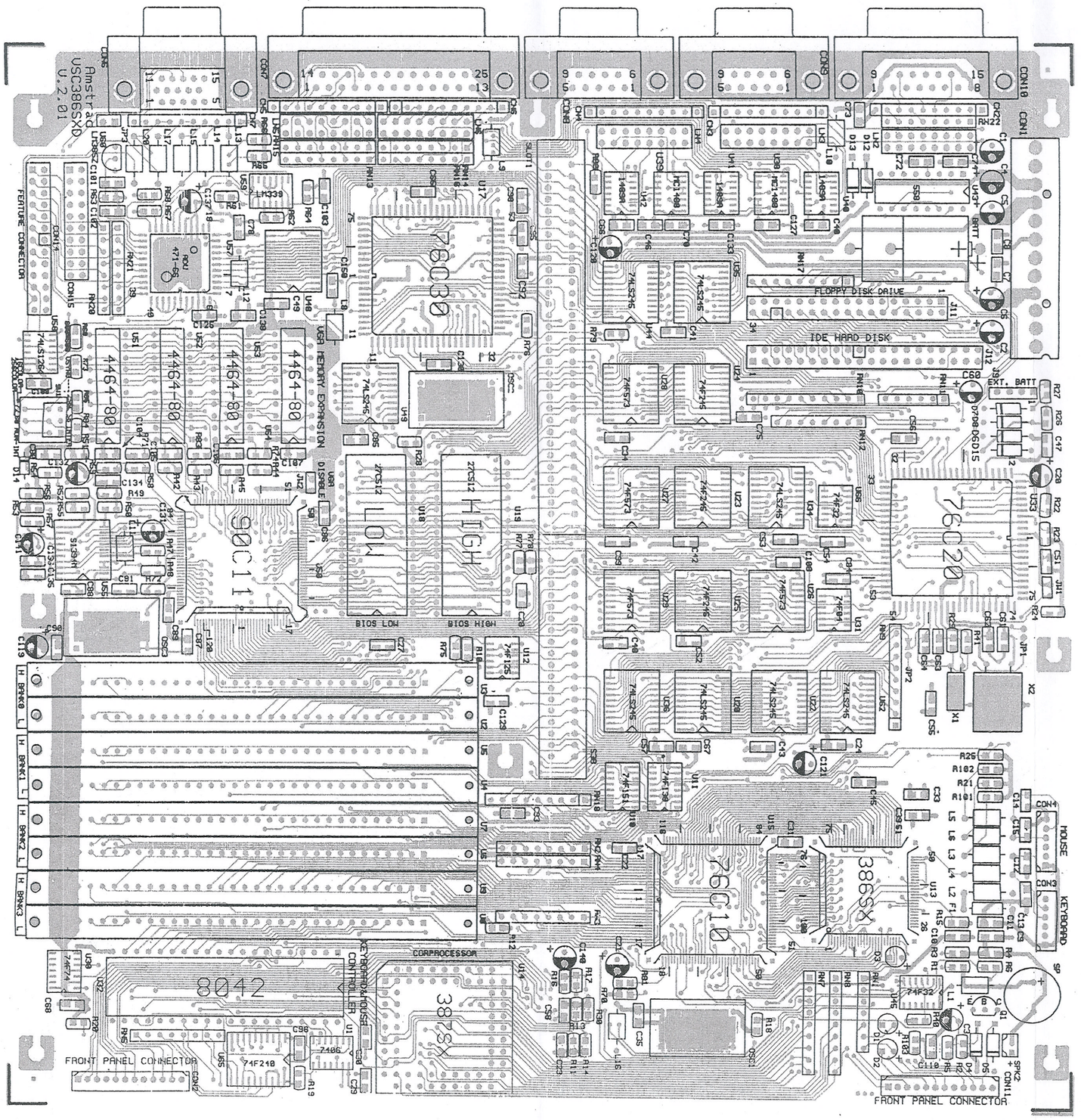

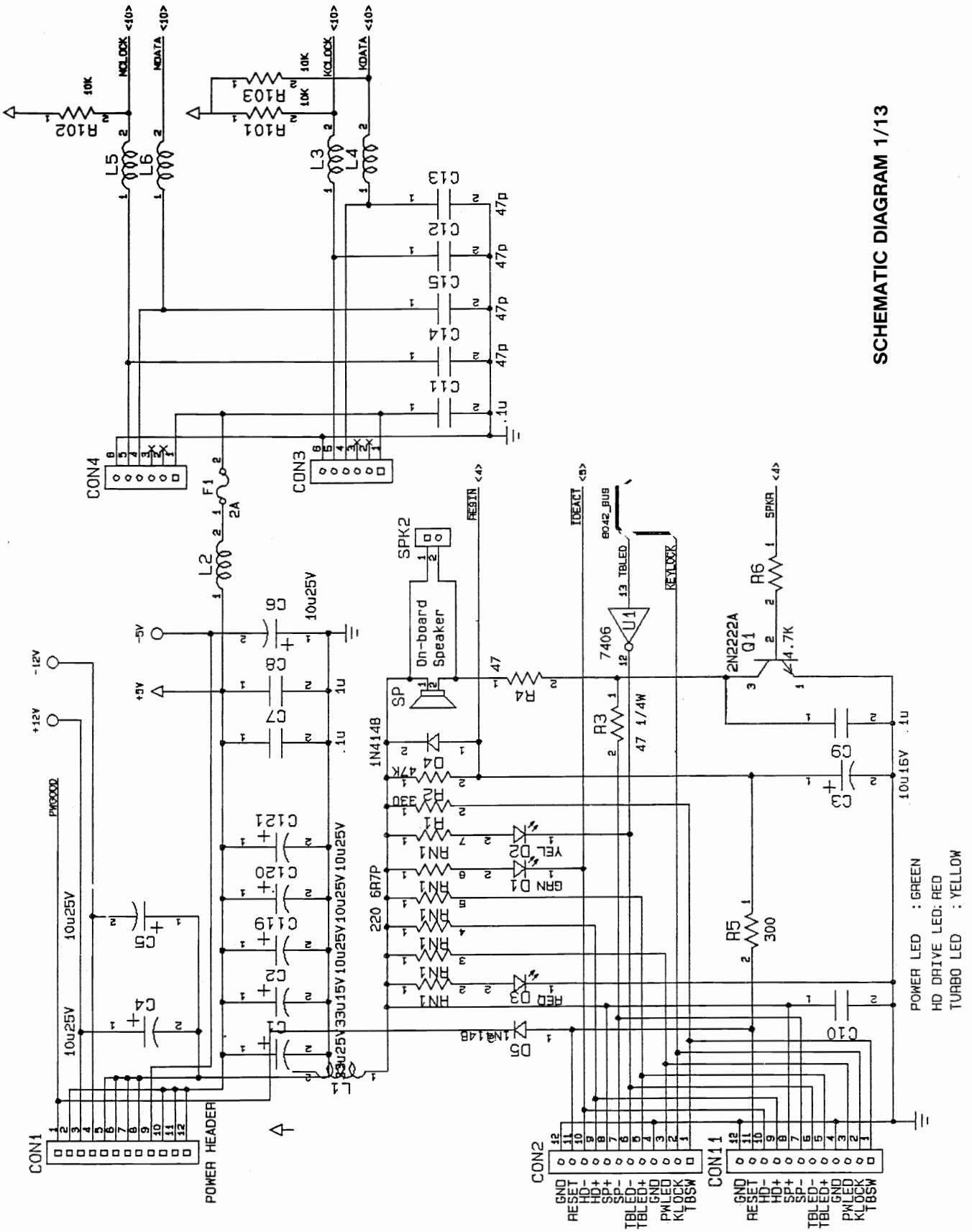
SCHEMATIC DIAGRAM 1/13
POWER LED : GREEN
HD DRIVE LED: RED
TURBO LED : YELLOW
CON1
POWER HEADER
CON2
CON11
CON3
CON4
SPK2
On-board Speaker
U1
7406
Q1
2N2222A
R1
R2
R3
R4
R5
R6
RN1
D1
D2
D3
D4
D5
C1
C2
C3
C4
C5
C6
C7
C8
C9
C10
C119
C120
C121
C11
C12
C13
C14
C15
L1
L2
L3
L4
L5
L6
F1
2A
R101
R102
R103
10K
47p
.1u
1u
10u25V
33u15V
47
4.7K
300
220
330
47K
1N4148
RESIN
IDEACT
KEYLOCK
KCLOCK
KDATA
MCLOCK
MDATA
PWGOOD
+12V
-12V
+5V
-5V
GND
RESET
HD-
HD+
SP+
SP-
TBLED-
TBLED+
PWLED
KLOCK
TBSW

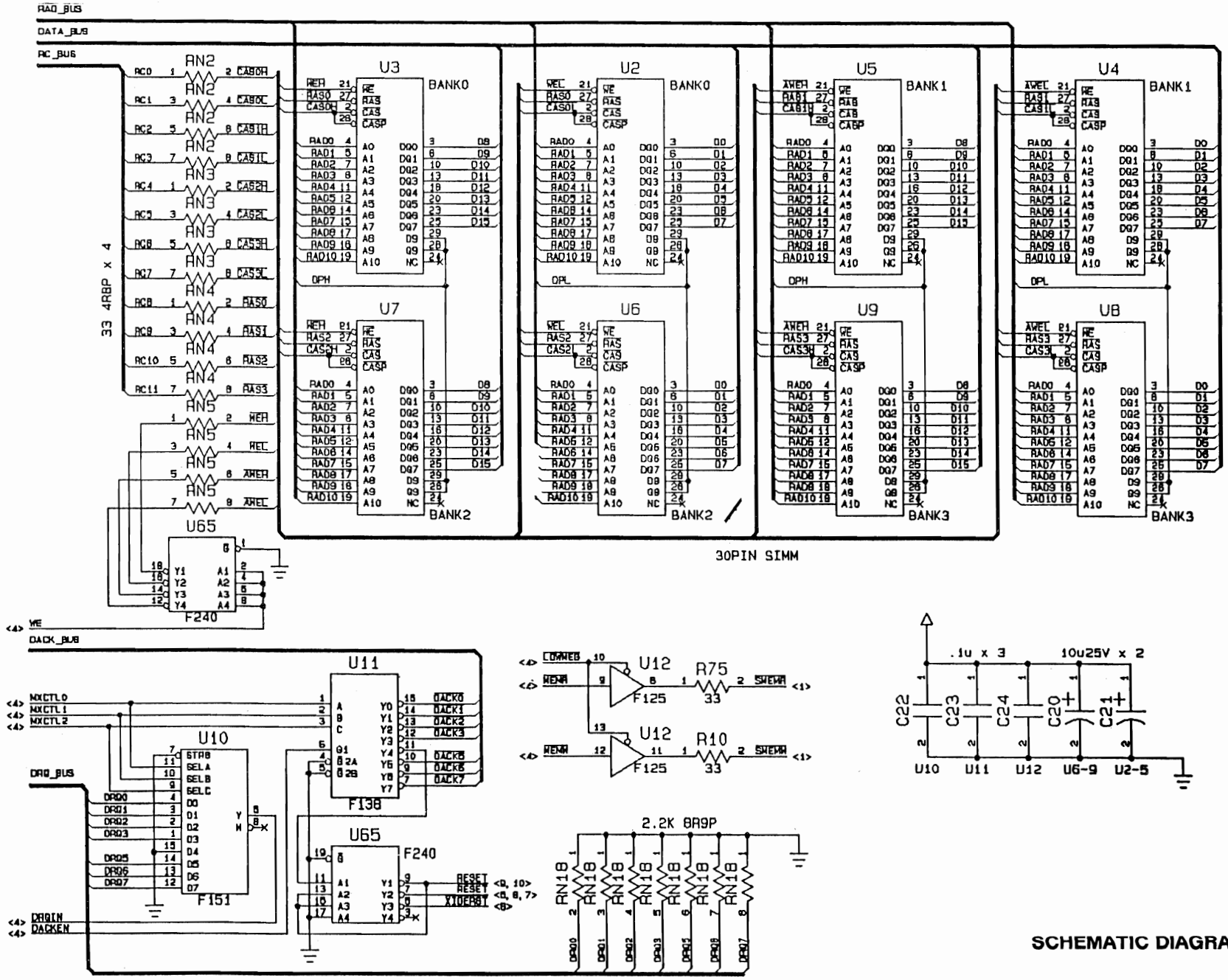

SCHEMATIC DIAGRAM 2/13

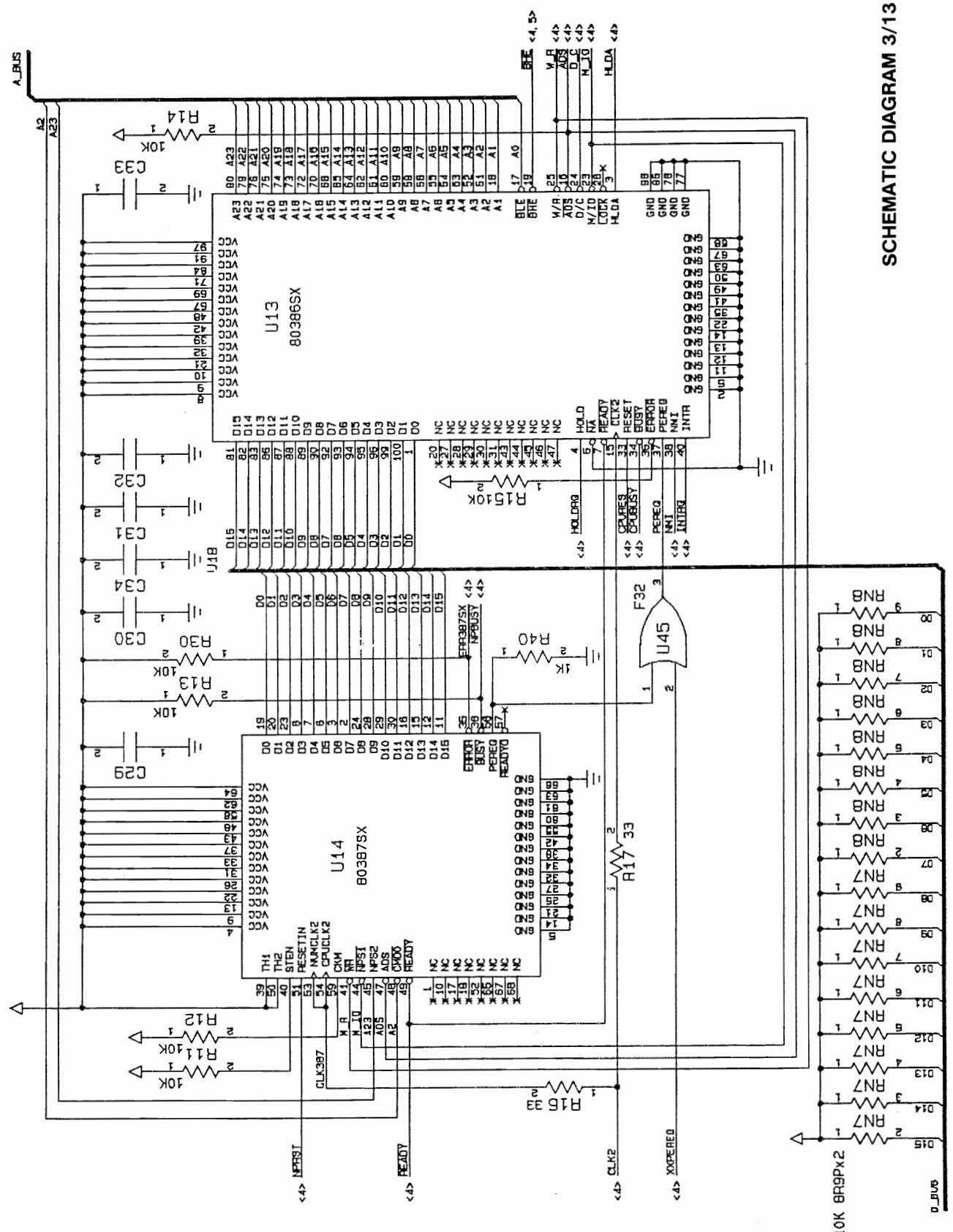

SCHEMATIC DIAGRAM 3/13

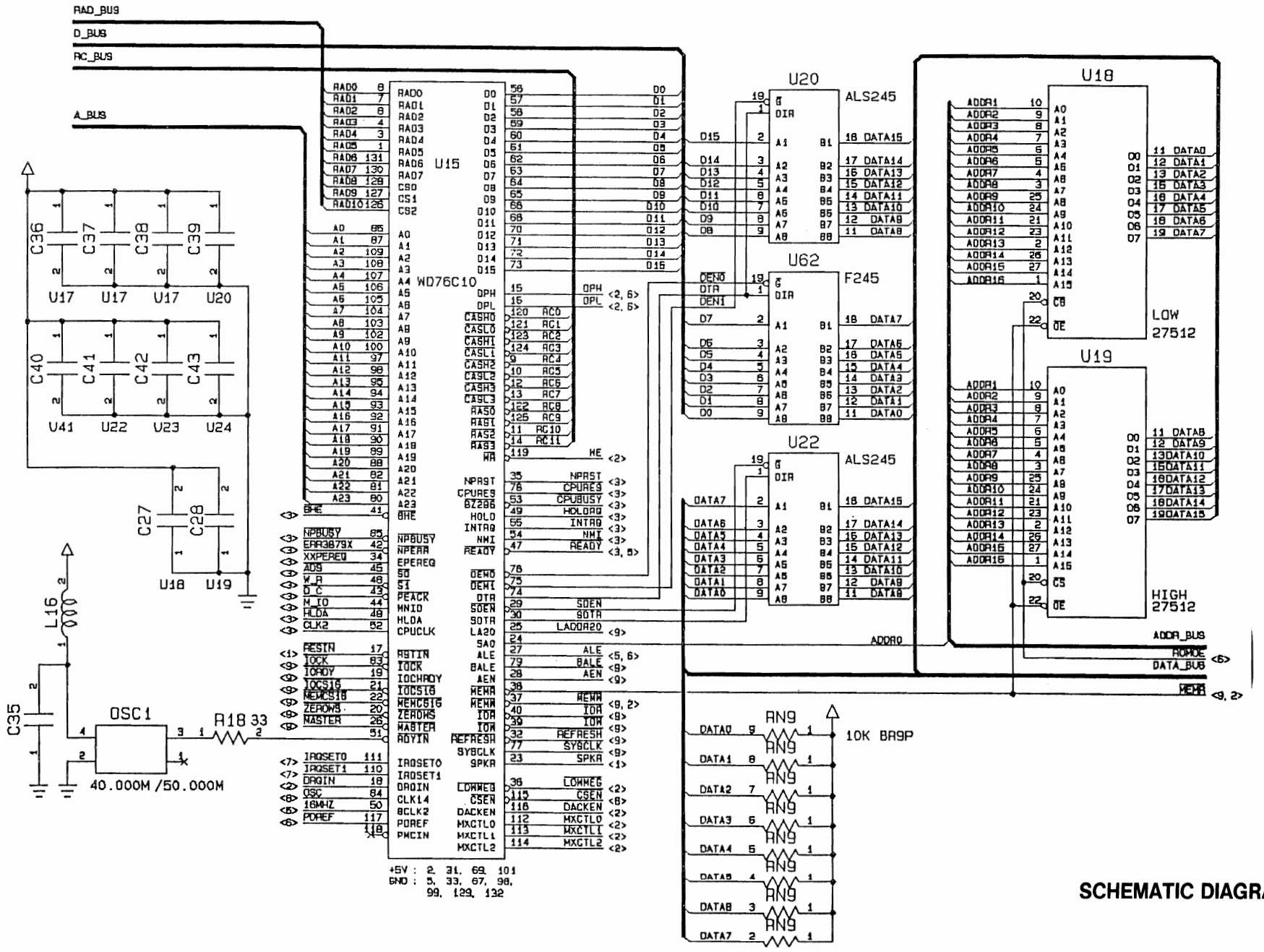

SCHEMATIC DIAGRAM 4/13

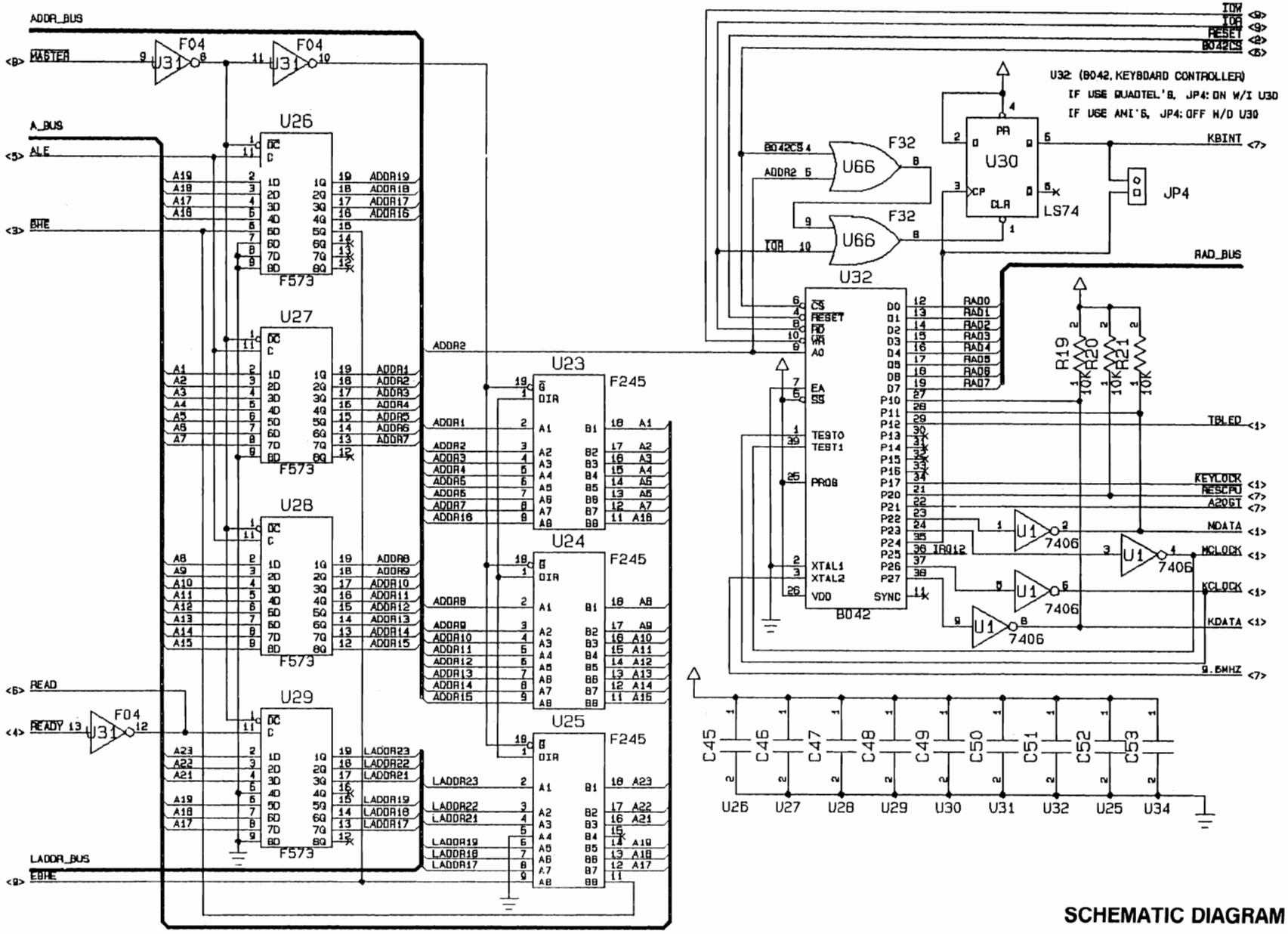

SCHEMATIC DIAGRAM 5/13

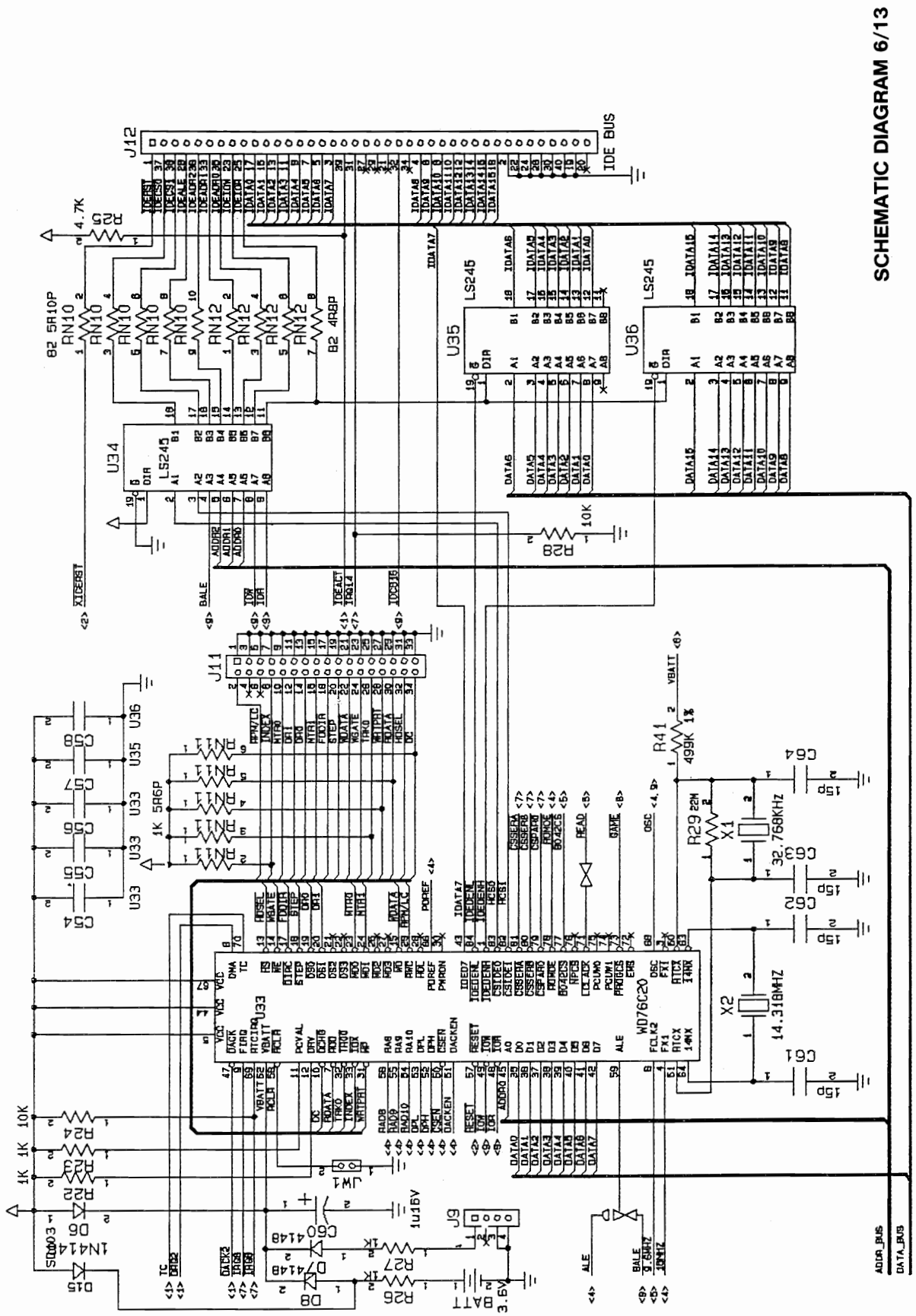

SCHEMATIC DIAGRAM 6/13

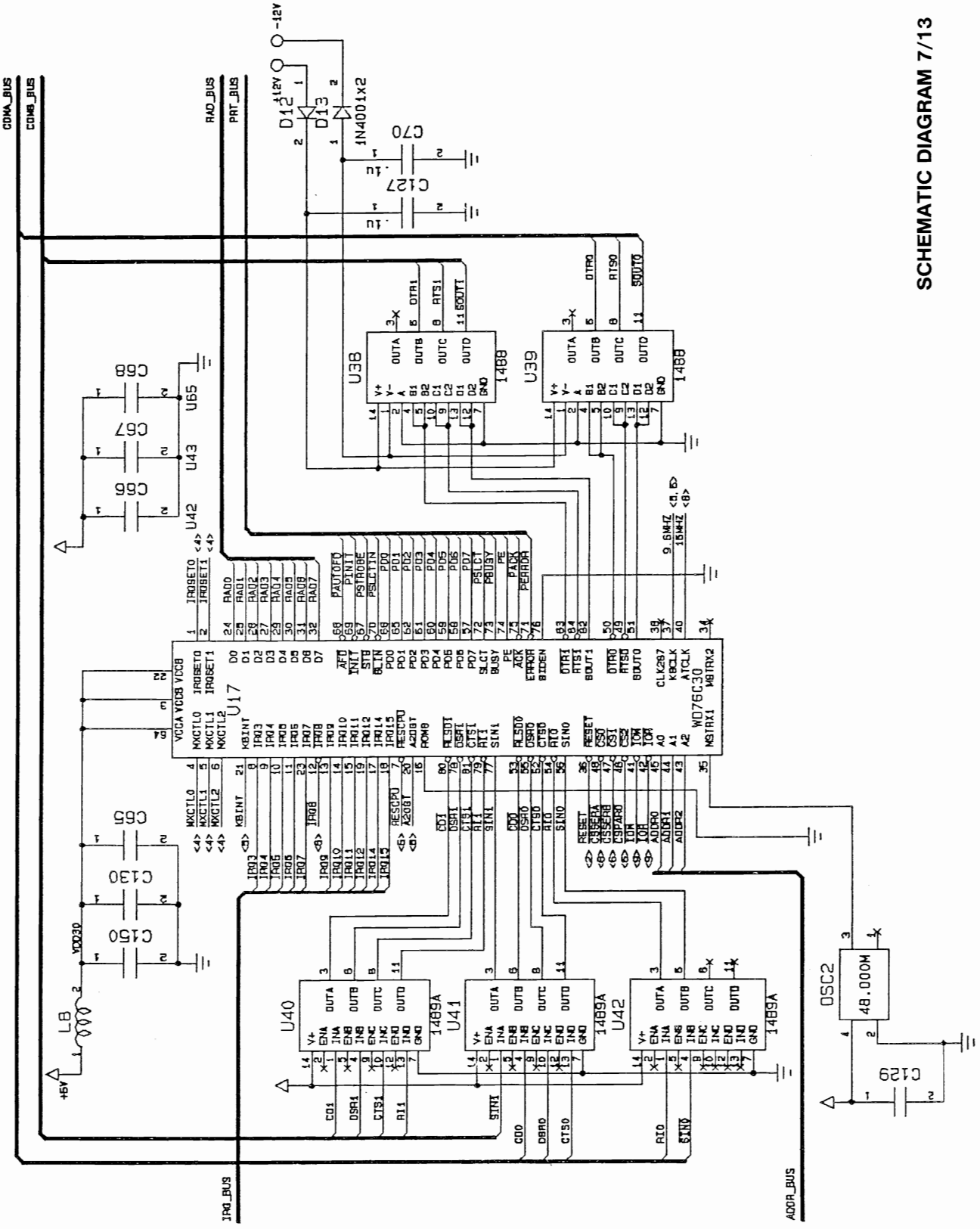

SCHEMATIC DIAGRAM 7/13

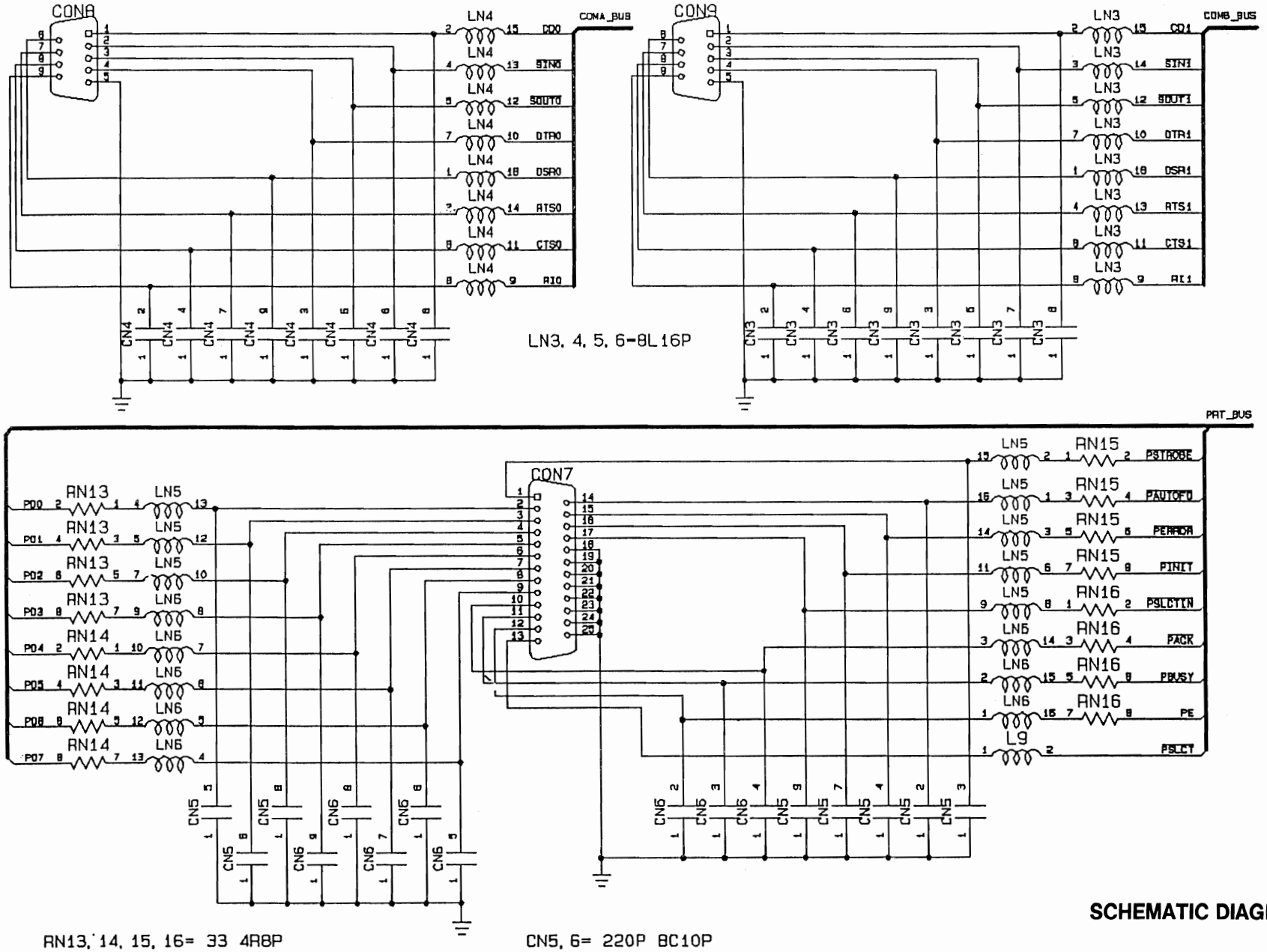

SCHEMATIC DIAGRAM 8/13

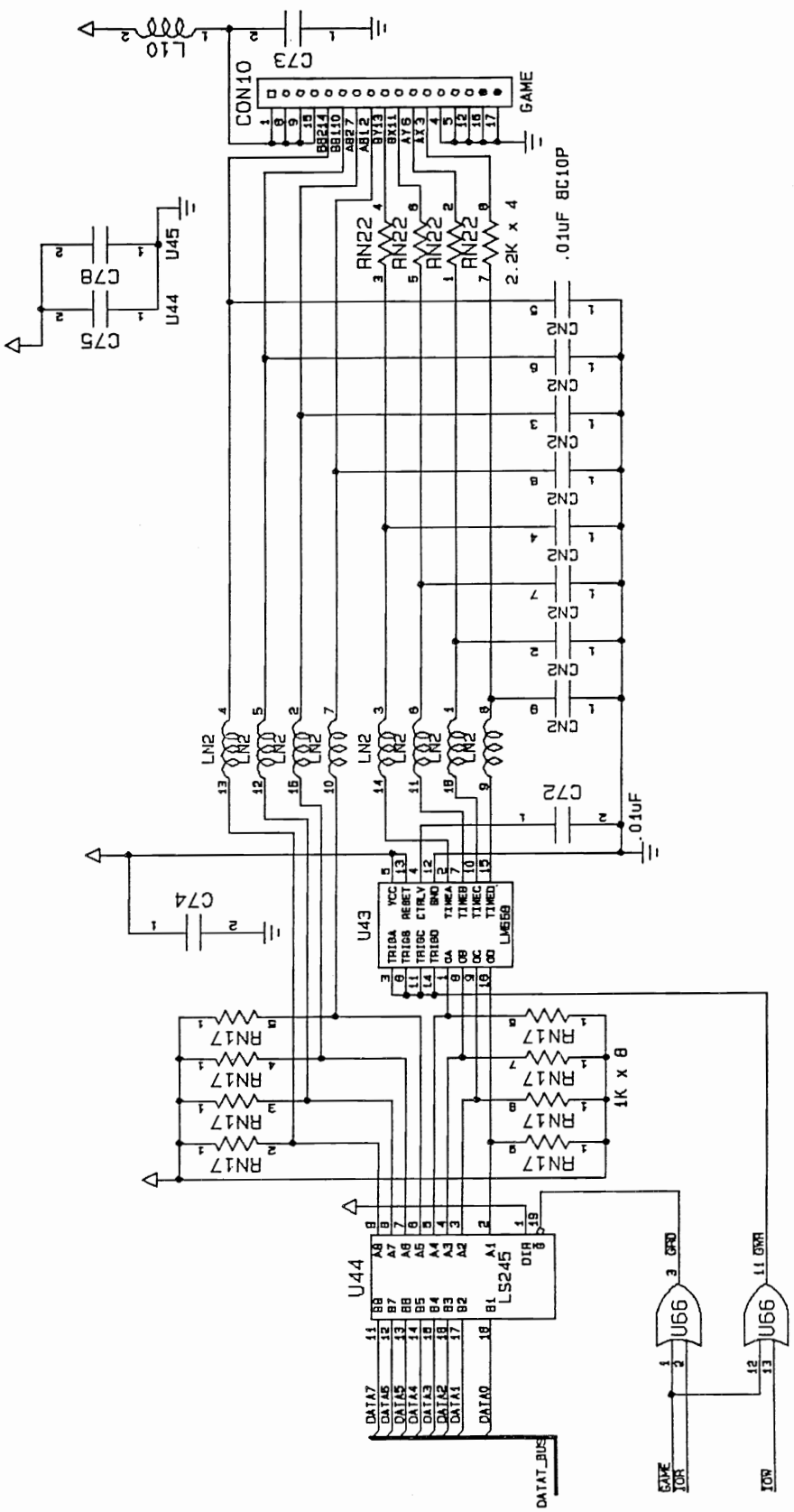

SCHEMATIC DIAGRAM 9/13

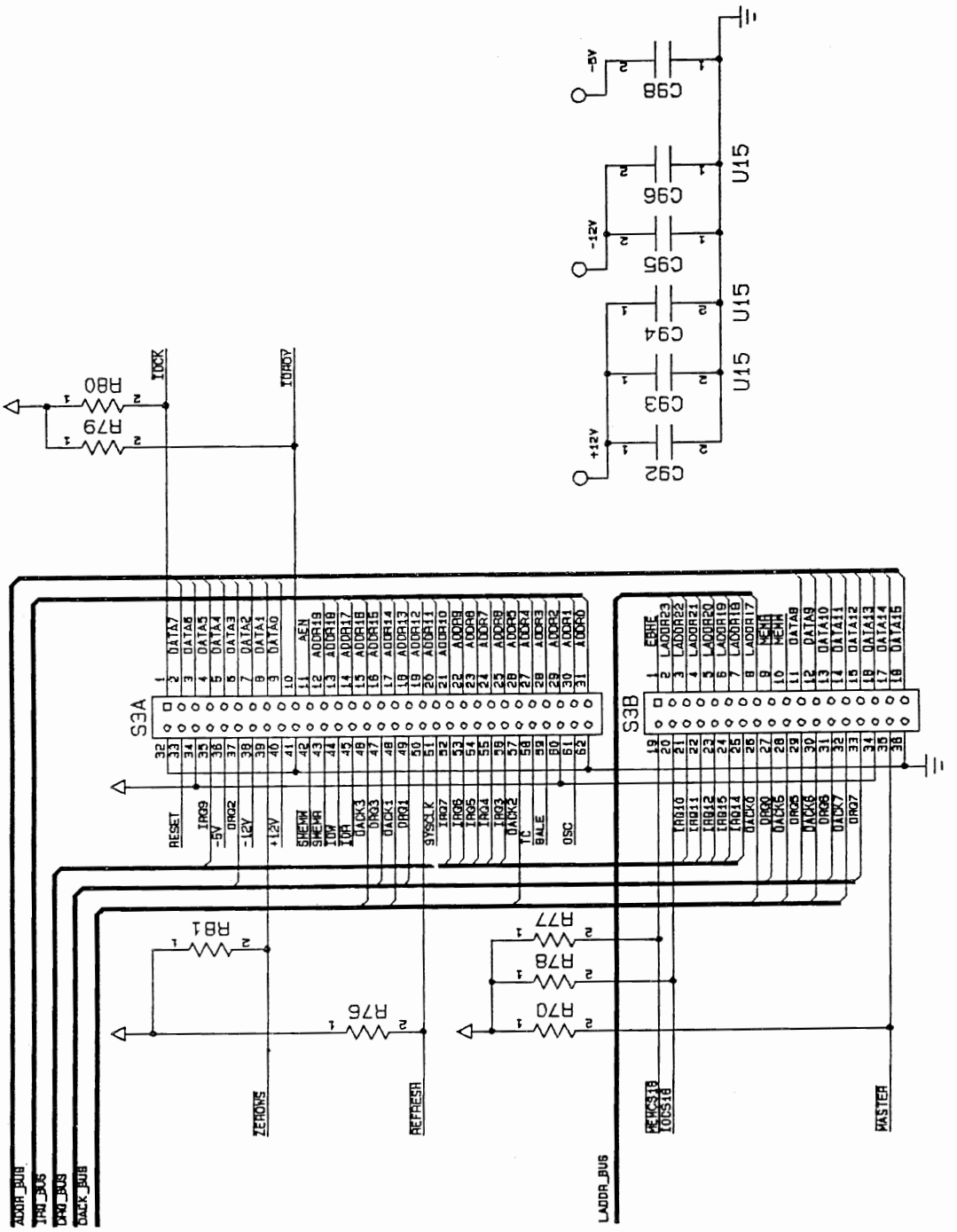

SCHEMATIC DIAGRAM 10/13

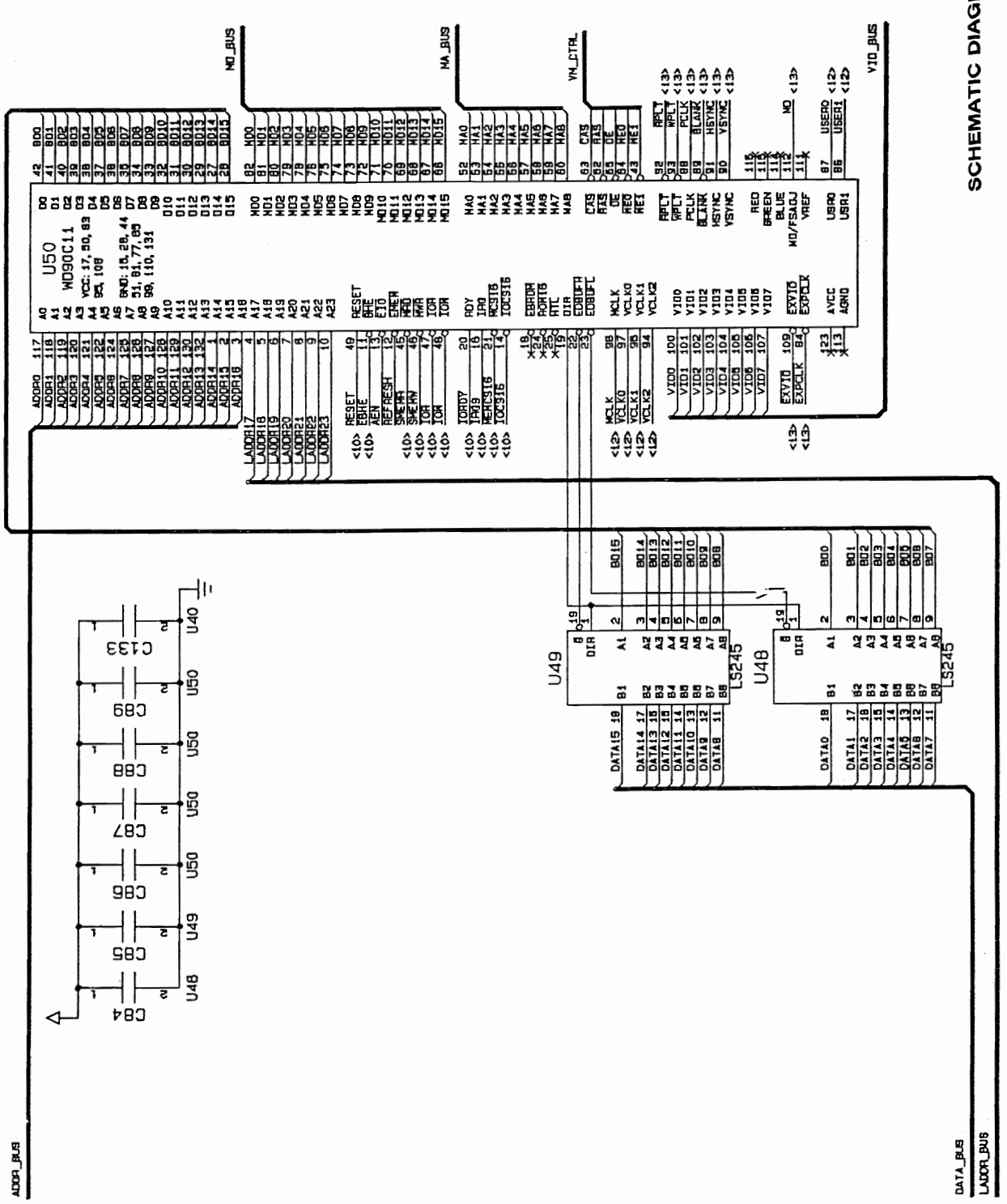

SCHEMATIC DIAGRAM 11/13

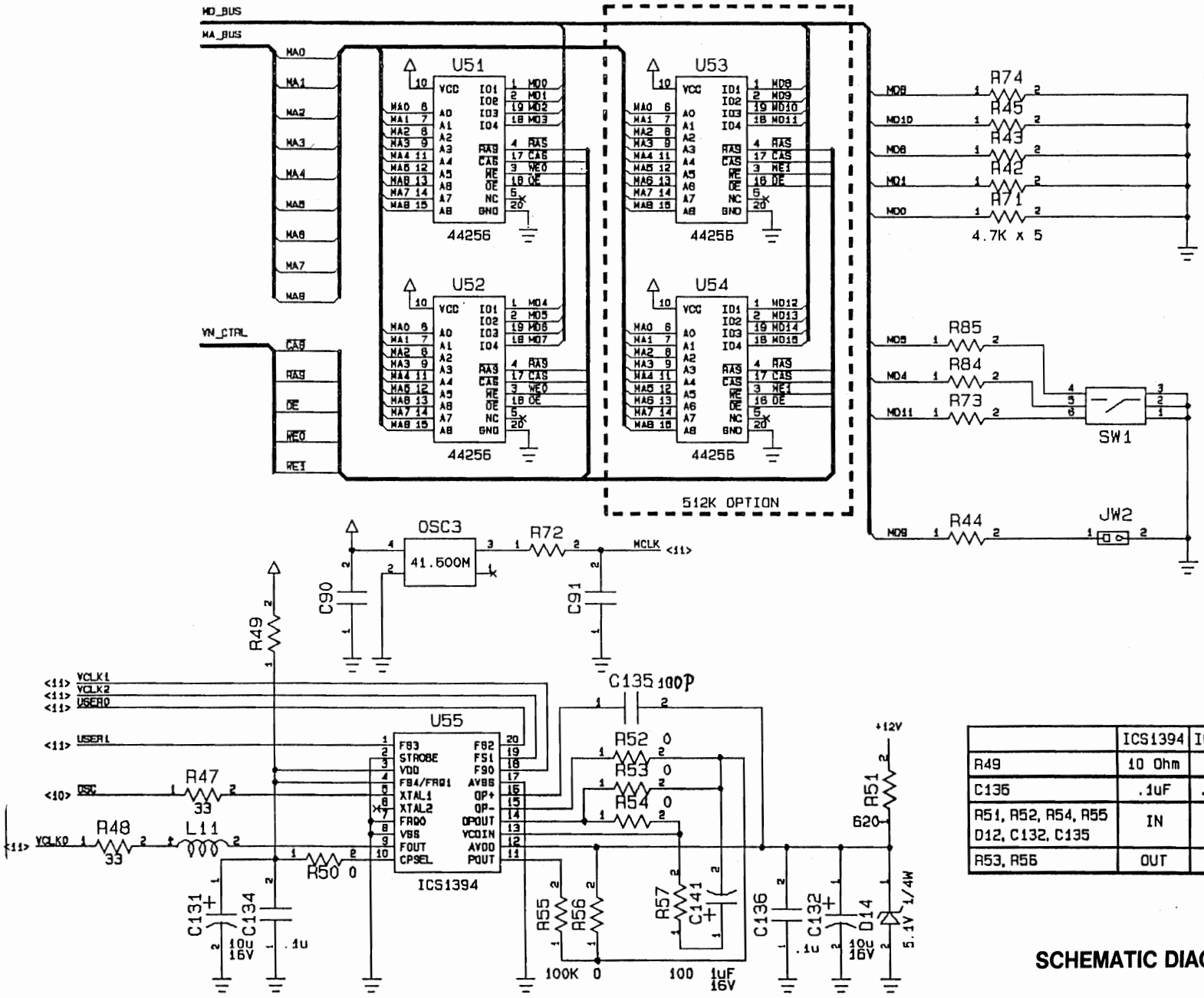

	ICS1394	ICS1494
R49	10 Ohm	FB
C135	.1uF	.047uF
R51, R52, R54, R55 D12, C132, C135	IN	OUT
R53, R56	OUT	IN

SCHEMATIC DIAGRAM 12/13

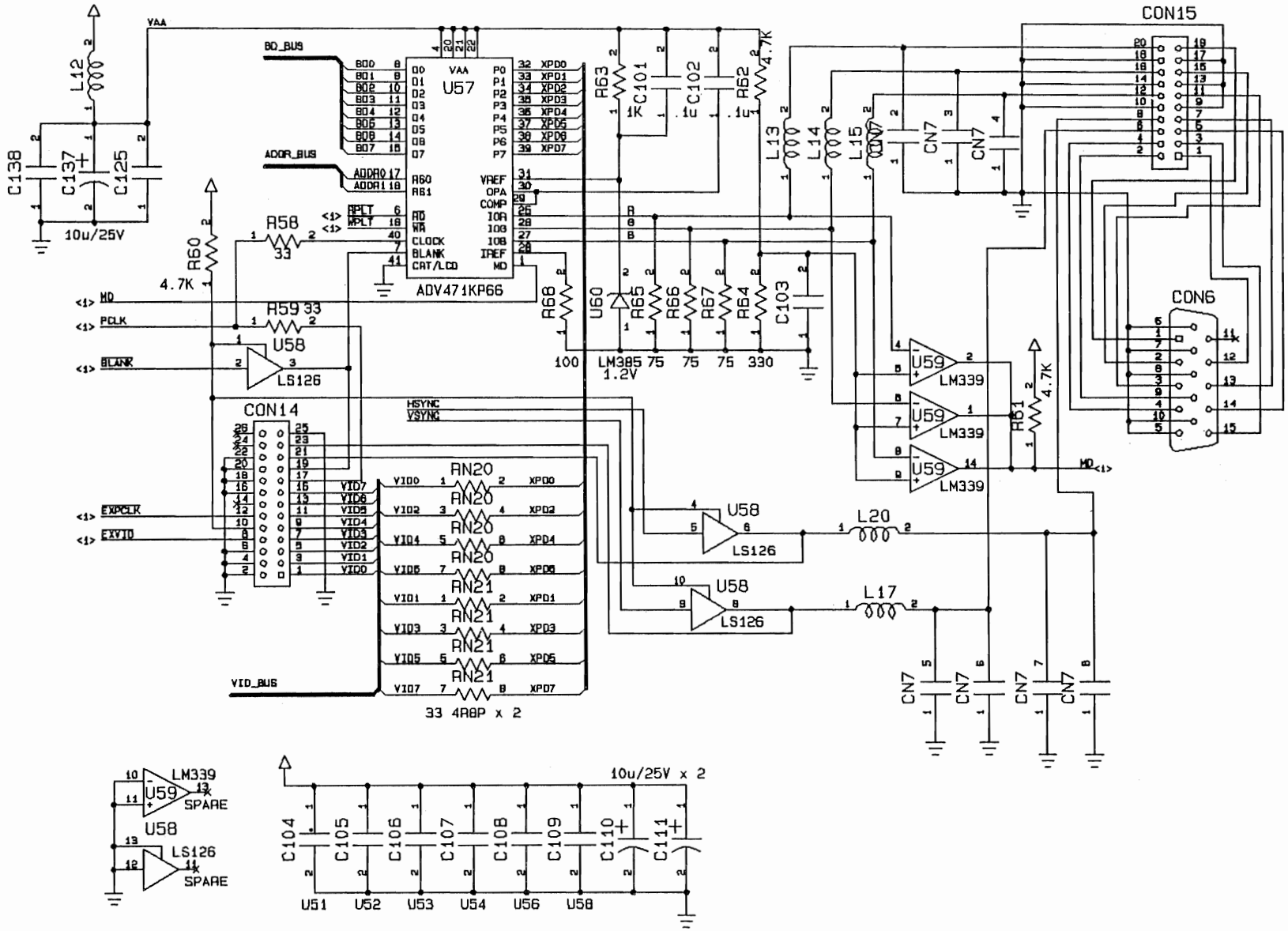

SCHEMATIC DIAGRAM 13/13

CABINET EXPLODED VIEW

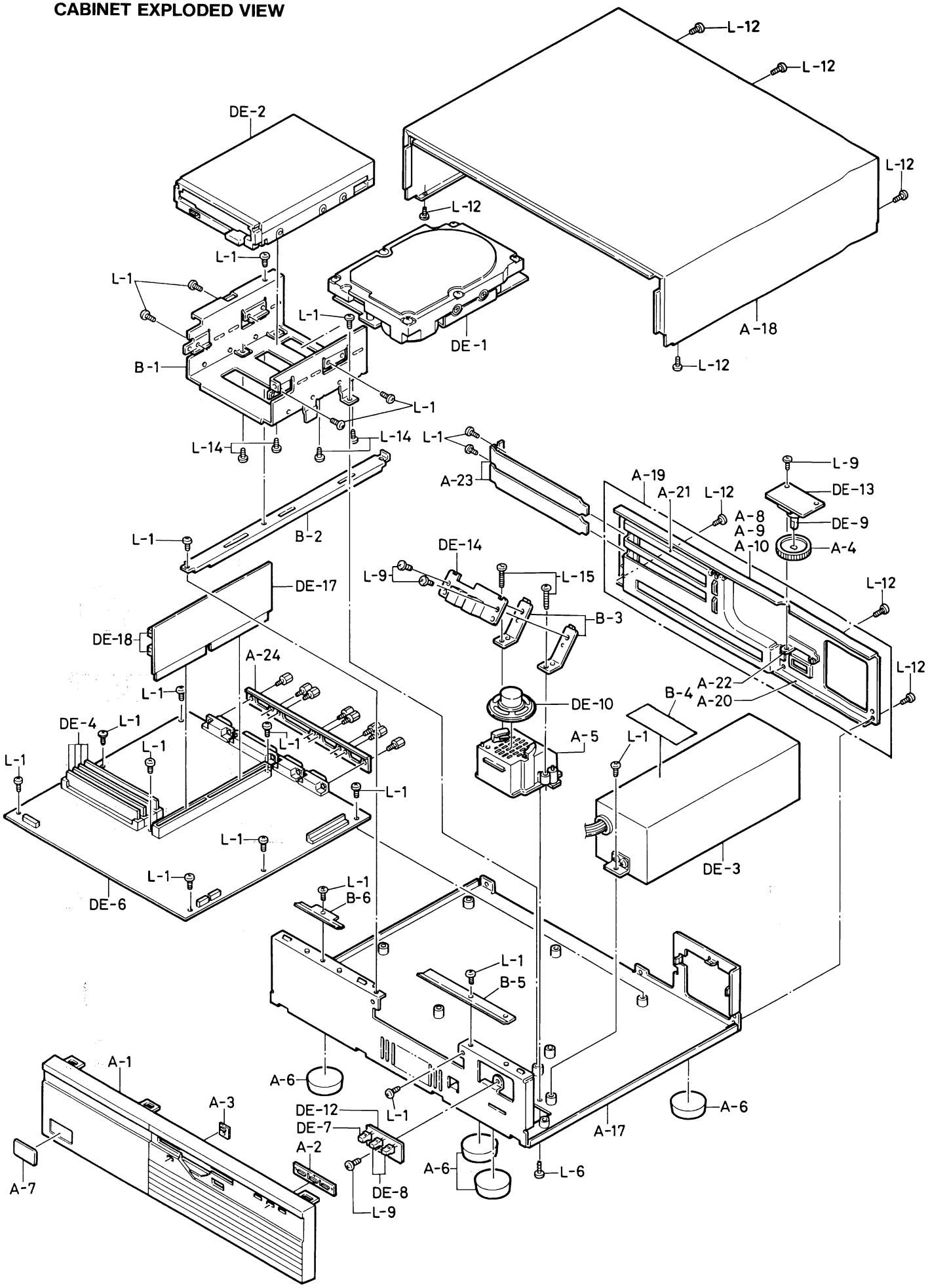

PC7386SX CABINET PARTS LIST

Ref.	Description	Part No.
A-1	Front Panel Assembly PC7386SX 40MB	273881
	Front Panel Assembly PC7386SX 80MB	273887
A-4	Knob Volume Control	273892
A-5	Keyboard Mouse Cover	
A-6	Foot	
A-7	Brand Inlay	
A-8	Rating Label	
A-9	HDD Setup Label	
A-10	Serial No. Label	
A-17	Bottom	
A-18	Top Cabinet	273893
A-19	Rear Chassis Assembly	
A-23	Expansion Slot Cover	
A-24	Jack Cover	
B-1	FDD / HDD Bracket	
B-2	Bar	
DE-3	Power Supply Module	273888

PC7386SX ELECTRICAL PARTS LIST

Ref. No.	Description	Part No.
IC's		
U1	IC 7406 SFM	273930
U10	IC 74F151 SFM	273931
U11	IC 74F138 SFM	202901
U12	IC 74F125 SFM	272843
U13	IC 80386SX-25 CPU Flat Pack	273932
U15	IC WD76C10 VER:F FLat Pack	273883
U17	IC WD76C30 VER:D Flat Pack	273885
U18	IC 27C512-150 ROM Low 41651	273933
U19	IC 27C512-150 ROM High 41651	273933
U20, 22, 34-36, 48, 49, 62	IC 74LS245 SFM	272264
U23-25	IC 74F245 SFM	272245
U26-29	IC 74F573 SFM	273934
U30	IC 74F74 SFM	272242
U31	IC 74F04 SFM	272842
U32	IC 8042 Quad Op Amp	273935
U33	IC WD76C20 VER:E Flat Pack	273884
U38, 39	IC MC1488A SFM	272286
U40-42	IC MC1489A SFM	272287
U45, 66	IC 74F32 SFM	273936
U50	IC ED90C11 Flat Pack	273886
U51, 52	IC 44256-8 Dram Dip	273937
U55	IC ICS1394M-030 SFM	273938
U57	IC ADV471-66 PLCC	273939
U58	IC 74LS126 SFM	273940
U59	IC LM339 SFM	273941
U60	IC LM385Z-1.2	273942
U65	IC 74F240 SFM	273943
Transistors		
Q1	TR 2N2222A	273944
Diodes		
D3	LED Green	
D4-8, 15	D 1N4148	270754
D12, 13	D 1N4001	192506
D14	DZ 5.1V ¼W	
Miscellaneous		
DE-2	FDD MP-F17W-10 5MM	272723
DE-1	HDD Segate ST351 (AX) UK Formated	273908
	HDD Segate ST351 (AX)	275001
	HDD Sony 80MB UK Formated	373909
	HDD Sony 80MB	41182
DE-3	Power Supply Module	273888
DE-6	Main PCB (No Simms or CPU fitted)	273894
DE-7	LED Green LN350GPH	
DE-8	LED Amber LN450YPH	
DE-9	VROT 500Ω AL001	273922
DE-10	Speaker	273923
F1⚠	BEL 2A MQ125V Fuse Resistor	273945
OSC1	50.00MHz Crystal	176736
OSC2	48.00MHz Crystal	272345
OSC3	42.00MHz Crystal	272343
X1	32.768KHz Crystal	176174
X2	14.318MHz Crystal	273162
	FDD Cable Assy	273925
	HDD Cable Assy	273926
	Main PCB Assy	273894
	LED PCB Assy	273891
	Expansion PCB Assy	
	Volume PCB Assy	
	Mains Lead UK	270053
	Mains Lead Euro	271067
	User Instructions 41774	273903
	MSDOS Instructions	273927
	Counter Point Instructions	273928
	Disk Set MSDOS + Counterpoint	273929
	Complete Keyboard Assy UK/HL	273895
	Complete Keyboard Assy SP	273900
	Complete Keyboard Assy AU	273901
	Complete Keyboard Assy FR	273899
	Complete Keyboard Assy IT	273898
	Complete Keyboard Assy GE	273897
	Carton PC7386SX HD40	273882
	Carton PC7386SX HD80	273889
	Set Poly Packing	273972